74VCXHQ163245

16-BIT DUAL SUPPLY BUS TRANSCEIVER LEVEL TRANSLATOR WITH BUS HOLD AND EMI NOISE CONTROL

- HIGH SPEED: t_{PD} =6.0ns (MAX.) at T_A=85°C
  V_{CCA} = 3.0V V_{CCB} = 2.3V; Bn to An
- LOW POWER DISSIPATION:
  I_{CCA} = I_{CCB} = 20µA(MAX.) at T_A=85°C
- SYMMETRICAL OUTPUT IMPEDANCE:
  $|I_{OHA}|$ = I_{OLA} = 2.6mA MIN at
  V_{CCA} = 3.0V; V_{CCB} = 1.65V or 2.3V
  $|I_{OHB}|$ = I_{OLB} = 6mA (MIN at
  V_{CCA} = 2.3V or 3.0V; V_{CCB} = 1.65V)
- BALANCED PROPAGATION DELAYS:
  $t_{PLH} \cong t_{PHL}$
- POWER DOWN PROTECTION ON INPUTS AND OUTPUTS
- SERIES RESISTOR ON A SIDE
- LIMITED EMI NOISE: $t_{rA} \cong t_{fA} \geq$ 4ns at C_L =10pF
- OPERATING VOLTAGE RANGE:
  V_{CCA}(OPR) = 2.3V to 3.6V (1.2V Data Retention)
  V_{CCB}(OPR) = 1.65V to 3.6V (1.2V Data Retention)
- PIN AND FUNCTION COMPATIBLE WITH 74 SERIES 16245
- BUS HOLD PROVIDED ON DATA INPUT BOTH SIDE
- LATCH-UP PERFORMANCE EXCEEDS 500mA (JESD 17)
- ESD PERFORMANCE:
  HBM > 2000V (MIL STD 883 method 3015);
  MM > 200V

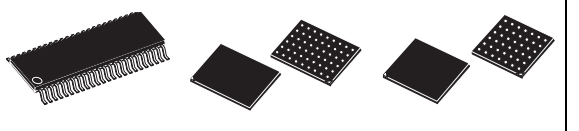

TSSOP **TFBGA** **µTFBGA**

Table 1: Order Codes

PACKAGE	T & R
TSSOP48	74VCXHQ163245TTR
TFBGA54	74VCXHQ163245LBR
µTFBGA42	74VCXHQ163245TBR
µTFBGA42 (*)	74VCXHQ163245R-E

(*) Lead-Free Compliant.

DESCRIPTION

The 74VCXHQ163245 is a dual supply low voltage CMOS 16-BIT BUS TRANSCEIVER fabricated with sub-micron silicon gate and five-layer metal wiring C^2MOS technology. Designed for use as an interface between a 3.3V bus and a 2.5V or 1.8V bus in a mixed 3.3V/ 1.8V,3.3V/2.5V and 2.5V/1.8V supply systems, it achieves high speed operation while maintaining the CMOS low power dissipation and limited rise and fall time (Low EMI).

This IC is intended for two-way asynchronous communication between data buses and the direction of data transmission is determined by nDIR inputs. The enable inputs $n\overline{G}$ can be used to disable the device so that the buses are effectively isolated. The A-port interfaces with the 3V bus, the B-port with the 2.5V and 1.8V bus.

All inputs are equipped with protection circuits against static discharge, giving them 2KV ESD immunity and transient excess voltage. All floating bus terminals during High Z State don't need external pull-up or pull-down resistor.

Figure 1: Logic Diagram

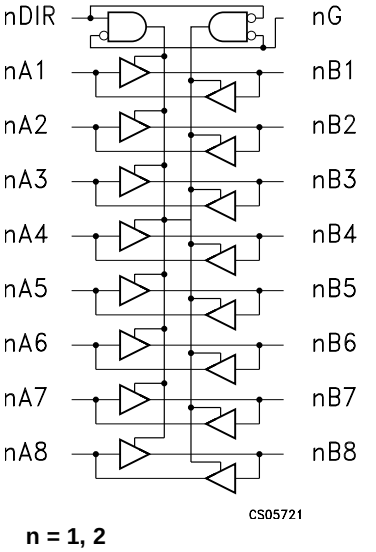

n = 1, 2

Obsolete Product(s) - Obsolete Product(s)

Figure 2: Input And Output Equivalent Circuit

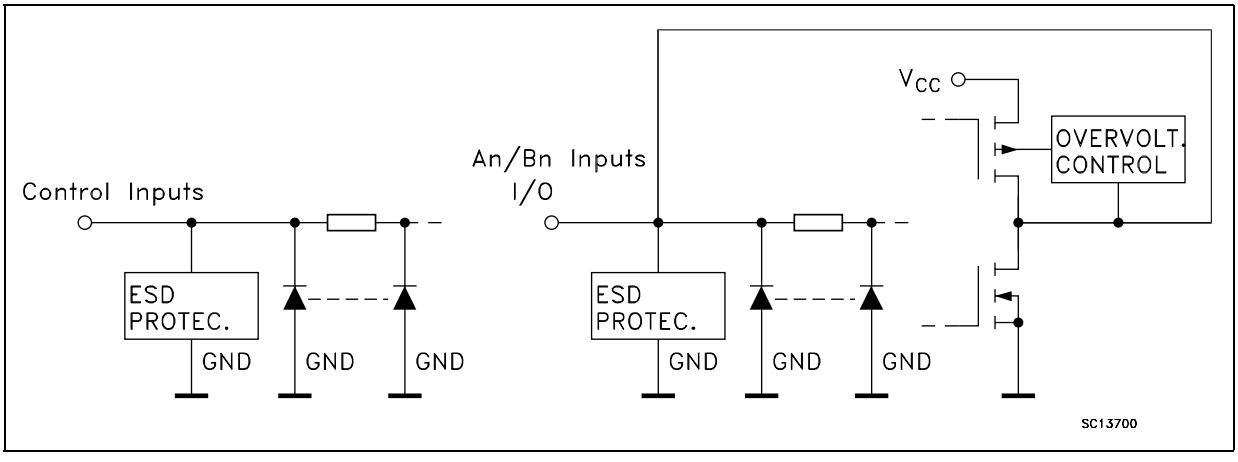

Table 2: Pin Description

TFBGA54 PIN N°	μTFBGA42 PIN N°	TSSOP PIN N°	SYMBOL	NAME AND FUNCTION
A3	B3	1	1DIR	Directional Controls
J3	F3	24	2DIR	Directional Controls
A6, B5, B6, C5, C6, D5, D6, E5	A4, A5, A6, B5, B6, C5, C6, D5	47, 46, 44, 43, 41, 40, 38, 37	1A1 to 1A8	Data Inputs/Outputs
E6, F5, F6, G5, G6, H5, H6, J6	D6, E5, E6, F5, F6,G4, G5, G6	36, 35, 33, 32, 30, 29, 27, 26	2A1 to 2A8	Data Inputs/Outputs
A1, B2, B1, C2, C1, D2, D1, E2	A3, A2, A1, B2, B1, C2, C1, D2	2, 3, 5, 6, 8, 9, 11, 12	1B1 to 1B8	Data Inputs/Outputs
E1, F2, F1, G2, G1, H2, H1, J1	D1, E2, E1, F2, F1,G3, G2, G1	13, 14, 16, 17, 19, 20, 22, 23	2B1 to 2B8	Data Inputs/Outputs
J4	F4	25	$\overline{2G}$	Output Enable Inputs
A4	B4	48	$\overline{1G}$	Output Enable Inputs
D3, D4, E3, E4, F3, F4	C3, C4, E3, E4	4, 10, 15, 21, 28, 34, 39, 45	GND	Ground (0V)
A2, A5, B3, B4, H3, H4, J2, J5	-	-	NC	No Connected
C4, G4	D4	42, 31	V_{CCA}	Positive Supply Voltage
C3, G3	D3	7, 18	V_{CCB}	Positive Supply Voltage

Obsolete Product(s) - Obsolete Product(s)

Figure 3: Pin Connection (top view for TSSOP, top through view for BGA)

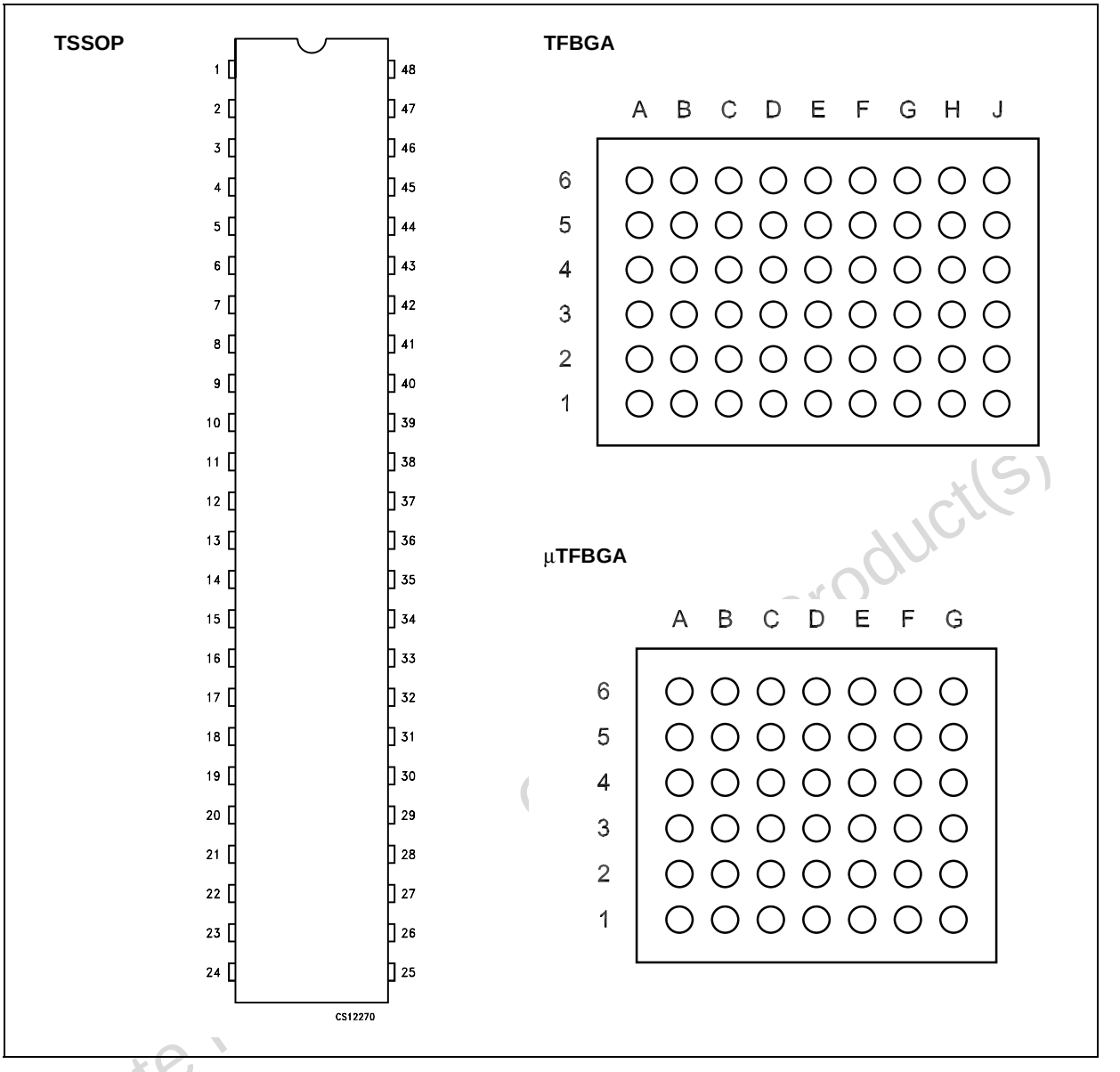

Table 3: Truth Table

INPUTS		FUNCTION		OUTPUT
$\overline{G}$	DIR	A BUS	B BUS	
L	L	OUTPUT	INPUT	A = B
L	H	INPUT	OUTPUT	B = A
H	X	Z	Z	Z

X=Don't care; Z=High Impedance

Obsolete Product(s)

Table 4: Absolute Maximum Ratings

Symbol	Parameter	Value	Unit
V_{CCA}	Supply Voltage	-0.5 to +4.6	V
V_{CCB}	Supply Voltage	-0.5 to +V_{CCA}+0.5	V
V_I	DC Input Voltage	-0.5 to +4.6	V
$V_{I/OA}$	DC I/O Voltage (Output disabled)	-0.5 to +4.6	V
$V_{I/OB}$	DC I/O Voltage (Output disabled)	-0.5 to +4.6	V
$V_{I/OA}$	DC I/O Voltage	-0.5 to V_{CCA} + 0.5	V
$V_{I/OB}$	DC I/O Voltage	-0.5 to V_{CCB} + 0.5	V
I_{IK}	DC Input Diode Current	– 20	mA
I_{OK}	DC Output Diode Current	– 50	mA
I_{OA}	DC Output Current	± 50	mA
I_{OB}	DC Output Current	± 50	mA
I_{CCA}	DC V_{CC} or Ground Current	± 100	mA
I_{CCB}	DC V_{CC} or Ground Current	± 100	mA
P_d	Power Dissipation	400	mW
T_{stg}	Storage Temperature	-65 to +150	°C
T_L	Lead Temperature (10 sec)	260	°C

Absolute Maximum Ratings are those value beyond which damage to the device may occur. Functional operation under these conditions is not implied

Table 5: Recommended Operating Conditions

Symbol	Parameter	Value	Unit
V_{CCA}	Supply Voltage	2.3 to 3.6	V
V_{CCB}	Supply Voltage	1.65 to V_{CCA}	V
V_I	Input Voltage (Dir, $\overline{G}$)	0 to V_{CCB}	V
$V_{I/OA}$	I/O Voltage	0 to V_{CCA}	V
$V_{I/OB}$	I/O Voltage	0 to V_{CCB}	V
T_{op}	Operating Temperature	-40 to 85	°C
dt/dv	Input Rise and Fall Time (note 1)	0 to 10	ns/V

1) V_{IN} from 0.8V to 2.0V at V_{CC} =3.0V

Obsolete Product(s) - Obsolete Product(s)

Table 6: DC Specification For V_{CCA}

Symbol	Parameter	Test Condition			Value					Unit
		V_{CCB} (*) (V)	V_{CCA} (*) (V)		T_A = 25 °C			-40 to 85 °C		
					Min.	Typ.	Max.	Min.	Max.	
V_{IHA}	High Level Input Voltage (An)	1.8	2.5		1.6			1.6		V
		1.8	3.3		2.0			2.0		
		2.5	3.3		2.0			2.0		
V_{ILA}	Low Level Input Voltage (An)	1.8	2.5				0.7		0.7	V
		1.8	3.3				0.8		0.8	
		2.5	3.3				0.8		0.8	
V_{OHA}	High Level Output Voltage	2.3	3.0	I_O=-100µA	2.8			2.8		V
		2.3	3.0	I_O=-2.6mA	2.61			2.55		
		1.65	3.0	I_O=-2.6mA	2.61			2.55		
		1.65	2.3	I_O=-2.1mA	1.95			1.87		
V_{OLA}	Low Level Output Voltage	2.3	3.0	I_O=100µA			0.2		0.2	V
		2.3	3.0	I_O=2.6mA			0.31		0.33	
		1.65	3.0	I_O=2.6mA			0.31		0.33	
		1.65	2.3	I_O=2.1mA			0.31		0.33	
I_{IA}	Input Leakage Current	2.7	3.6	V_I = V_{CC} or GND			± 0.5		± 5	µA
$I_{IA(HOLD)}$	Input Hold Current	1.65	2.3	V_I = 0.7 V	45			45		µA
		1.65	2.3	V_I = 1.6 V	-45			-45		
		1.65	3.0	V_I = 0.8 V	75			75		
		1.65	3.0	V_I = 2.0 V	-75			-75		
		2.3	3.0	V_I = 0.8 V	75			75		
		2.3	3.0	V_I = 2.0 V	-75			-75		
		2.7	3.6	V_I = 0 to 3.6 V					± 500	
I_{OZA}	High Impedance Output Leakage Current	2.7	3.6	V_{IA} = GND or 3.6V V_{IB} = V_{IHB} or V_{ILB} $\overline{G}$ = V_{CCB}			± 1.0		± 10	µA
I_{OFF}	Power Off Leakage Current	0	0	V_{IA} = GND to 3.6V V_{IB} = GND to 3.6V $\overline{G}$, Dir = GND to 3.6V			± 1.0		± 10	µA
I_{CCtA}	Quiescent Supply Current	1.95	3.6	V_{IA} =V_{CCA} or GND V_{IB} =V_{CCB} or GND Dir or $\overline{G}$=V_{CCB} or GND			2		20	µA
		1.95	2.7							
		2.7	3.6							
ΔI_{CCtA}	Maximum Quiescent Supply Current / Input (An)	2.7	3.6	V_{IA} =V_{CCA} - 0.6V V_{IB} =V_{CCB} or GND					0.75	mA
		1.95	3.6							
		1.95	2.7							

(*) V_{CC} range = 3.3±0.3; 2.5±0.2V; 1.8±0.15V

Obsolete Product(s) - Obsolete Product(s)

Table 7: DC Specification For V_{CCB}

Symbol	Parameter	Test Condition			Value					Unit
		V_{CCB} (V) (*)	V_{CCA} (V) (*)		T_A = 25 °C			-40 to 85 °C		
					Min.	Typ.	Max.	Min.	Max.	
V_{IHB}	High Level Input Voltage (Bn, Dir, G)	1.8	2.5		$0.65V_{CCB}$			$0.65V_{CCB}$		V
		1.8	3.3		$0.65V_{CCB}$			$0.65V_{CCB}$		
		2.5	3.3		1.6			1.6		
V_{ILB}	Low Level Input Voltage (Bn, Dir, G)	1.8	2.5				$0.35V_{CCB}$		$0.35V_{CCB}$	V
		1.8	3.3				$0.35V_{CCB}$		$0.35V_{CCB}$	
		2.5	3.3				0.7		0.7	
V_{OHB}	High Level Output Voltage	2.3	3.0	I_O=-100µA	2.1			2.1		V
		2.3	3.0	I_O=-18mA	1.7			1.7		
		1.65	3.0	I_O=-6mA	1.25			1.25		
		1.65	2.3	I_O=-6mA	1.25			1.25		
V_{OLB}	Low Level Output Voltage	2.3	3.0	I_O=100µA			0.2		0.2	V
		2.3	3.0	I_O=18mA			0.60		0.60	
		1.65	3.0	I_O=6mA			0.30		0.30	
		1.65	2.3	I_O=6mA			0.30		0.30	
I_{IB}	Input Leakage Current	2.7	3.6	$V_I = V_{CC}$ or GND			± 0.5		± 5	µA
$I_{IB(HOLD)}$	Input Hold Current	1.65	2.3	V_I = 0.57 V	25			25		µA
		1.65	2.3	V_I = 1.07 V	-25			-25		
		1.65	3.0	V_I = 0.57 V	25			25		
		1.65	3.0	V_I = 1.07 V	-25			-25		
		2.3	3.0	V_I = 0.7 V	45			45		
		2.3	3.0	V_I = 1.6 V	-45			-45		
		2.7	3.6	V_I = 0 to 2.7 V					± 500	
I_{OZB}	High Impedance Output Leakage Current	2.7	3.6	$V_{IA} = V_{IHA}$ or V_{ILA} V_{IB} = GND or 3.6V $\overline{G} = V_{CCB}$			± 1.0		± 10	µA
I_{CCtB}	Quiescent Supply Current	1.95	3.6	$V_{IA} = V_{CCA}$ or GND $V_{IB} = V_{CCB}$ or GND Dir or $\overline{G} = V_{CCB}$ or GND			2		20	µA
		1.95	2.7							
		2.7	3.6							
ΔI_{CCtB}	Maximum Quiescent Supply Current / Input (Bn, DIR, G)	2.7	3.6	$V_{IB} = V_{CCB}$ - 0.6V $V_{IA} = V_{CCA}$ or GND					0.75	mA
		1.95	3.6							
		1.95	2.7							

(*) V_{CC} range = 3.3±0.3; 2.5±0.2V; 1.8±0.15V

Obsolete Product(s) - Obsolete Product(s)

Table 8: Dynamic Switching Characteristics

Symbol	Parameter	Test Condition			Value					Unit
		V_{CCB} (V)	V_{CCA} (V)		T_A = 25 °C			-40 to 85 °C		
					Min.	Typ.	Max.	Min.	Max.	
V_{OLPA}	Dynamic Low Level Quiet An Output	1.8	2.5	C_L =10pF V_{IL} =0V V_{IH} =V_{CCB}		0.15				V
		1.8	3.3			0.20				
		2.5	3.3			0.20				
V_{OLPB}	Dynamic Low Level Quiet Bn Output	1.8	2.5	C_L =30pF V_{IL} =0V V_{IH} =V_{CCA}		0.25				V
		1.8	3.3			0.25				
		2.5	3.3			0.60				
V_{OLVA}	Dynamic Low Level Quiet An Output	1.8	2.5	C_L =10pF V_{IL} =0V V_{IH} =V_{CCB}		-0.15				V
		1.8	3.3			-0.20				
		2.5	3.3			-0.20				
V_{OLVB}	Dynamic Low Level Quiet Bn Output	1.8	2.5	C_L =30pF V_{IL} =0V V_{IH} =V_{CCA}		-0.25				V
		1.8	3.3			-0.25				
		2.5	3.3			-0.60				
V_{OHVA}	Dynamic High Level Quiet An Output	1.8	2.5	C_L =10pF V_{IL} =0V V_{IH} =V_{CCB}		2.35				V
		1.8	3.3			3.10				
		2.5	3.3			3.10				
V_{OHVB}	Dynamic High Level Quiet Bn Output	1.8	2.5	C_L =30pF V_{IL} =0V V_{IH} =V_{CCA}		1.70				V
		1.8	3.3			1.70				
		2.5	3.3			2.00				

Table 9: AC Electrical Characteristics (C_{LA} = 10pF, C_{LB} = 30pF, R_L = 500Ω)

Symbol	Parameter	Test Condition T_A = -40 to 85 °C						Unit
		V_{CCB}= 1.8 ± 0.15V		V_{CCB}= 1.8 ± 0.15V		V_{CCB}= 2.5 ± 0.2V		
		V_{CCA}= 2.5 ± 0.2V		V_{CCA}= 3.3 ± 0.3V		V_{CCA}= 3.3 ± 0.3V		
		Min.	Max.	Min.	Max.	Min.	Max.	
t_{PLH} t_{PHL}	Propagation Delay Time An to Bn	1.0	5.5	1.0	5.0	1.0	4.4	ns
t_{PLH} t_{PHL}	Propagation Delay Time Bn to An	1.0	7.7	1.0	6.5	1.0	6.0	
t_{PZL} t_{PZH}	Output Enable Time $\overline{G}$ to An	1.0	8.5	1.0	7.1	1.0	6.5	ns
t_{PZL} t_{PZH}	Output Enable Time $\overline{G}$ to Bn	1.0	7.0	1.0	7.0	1.0	5.0	
t_{PLZ} t_{PHZ}	Output Disable Time $\overline{G}$ to An	1.0	5.0	1.0	5.0	1.0	4.5	ns
t_{PLZ} t_{PHZ}	Output Disable Time $\overline{G}$ to Bn	1.0	5.0	1.0	5.0	1.0	4.5	
t_{OSLH} t_{OSHL}	Output To Output Skew Time (note1, 2)		0.5		0.5		0.75	ns

1) Skew is defined as the absolute value of the difference between the actual propagation delay for any two outputs of the same device switching in the same direction, either HIGH or LOW (t_{OSLH} = | t_{PLHm} - t_{PLHn}|, t_{OSHL} = | t_{PHLm} - t_{PHLn}|
2) Parameter guaranteed by design

Obsolete Product(s) - Obsolete Product(s)

Table 10: Capacitance Characteristics

Symbol	Parameter	Test Condition			Value					Unit
		V_{CCA} (V)	V_{CCB} (V)		T_A = 25 °C			-40 to 85 °C		
					Min.	Typ.	Max.	Min.	Max.	
C_{INB}	Input Capacitance	open	open			5				pF
$C_{I/O}$	Input/Output Capacitance	3.3	2.5			6				pF
C_{PD}	Power Dissipation Capacitance	3.3	2.5	f=10MHz		29				pF
		3.3	1.8			29				

1) C_{PD} is defined as the value of the IC's internal equivalent capacitance which is calculated from the operating current consumption without load. (Refer to Test Circuit). Average current can be obtained by the following equation. $I_{CC(opr)} = C_{PD} \times V_{CC} \times f_{IN} + I_{CC}/16$ (per circuit)

Figure 4: Test Circuit

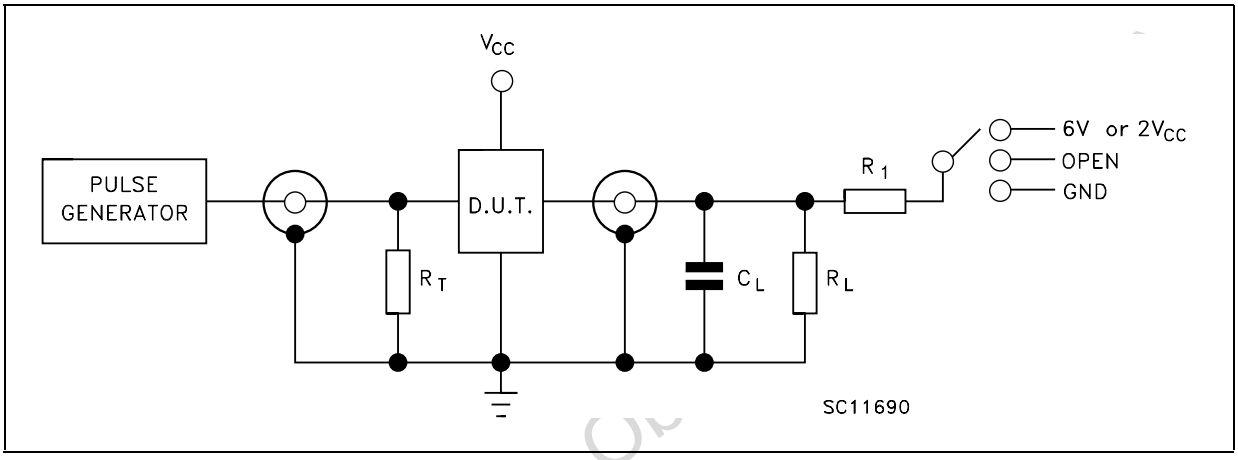

TEST	SWITCH
t_{PLH}, t_{PHL}	Open
t_{PZL}, t_{PLZ} (V_{CC} = 3.0 to 3.6V)	6V
t_{PZL}, t_{PLZ} (V_{CC} = 2.3 to 2.7V or V_{CC} = 1.65 to 1.95V)	$2V_{CC}$
t_{PZH}, t_{PHZ}	GND

C_L = 10/30pF or equivalent (includes jig and probe capacitance)
$R_L = R_1$ = 500Ω or equivalent
$R_T = Z_{OUT}$ of pulse generator (typically 50Ω)

Table 11: Waveform Symbol Value

Symbol	V_{CC}		
	3.0 to 3.6V	2.3 to 2.7V	1.65 to 1.95V
V_{IH}	V_{CC}	V_{CC}	V_{CC}
V_M	1.5V	$V_{CC}/2$	$V_{CC}/2$
V_X	V_{OL} +0.3V	V_{OL} +0.15V	V_{OL} +0.15V
V_Y	V_{OL} -0.3V	V_{OL} -0.15V	V_{OL} -0.15V

Obsolete Product(s) - Ob

Figure 5: Waveform - Propagation Delay (f=1MHz; 50% duty cycle)

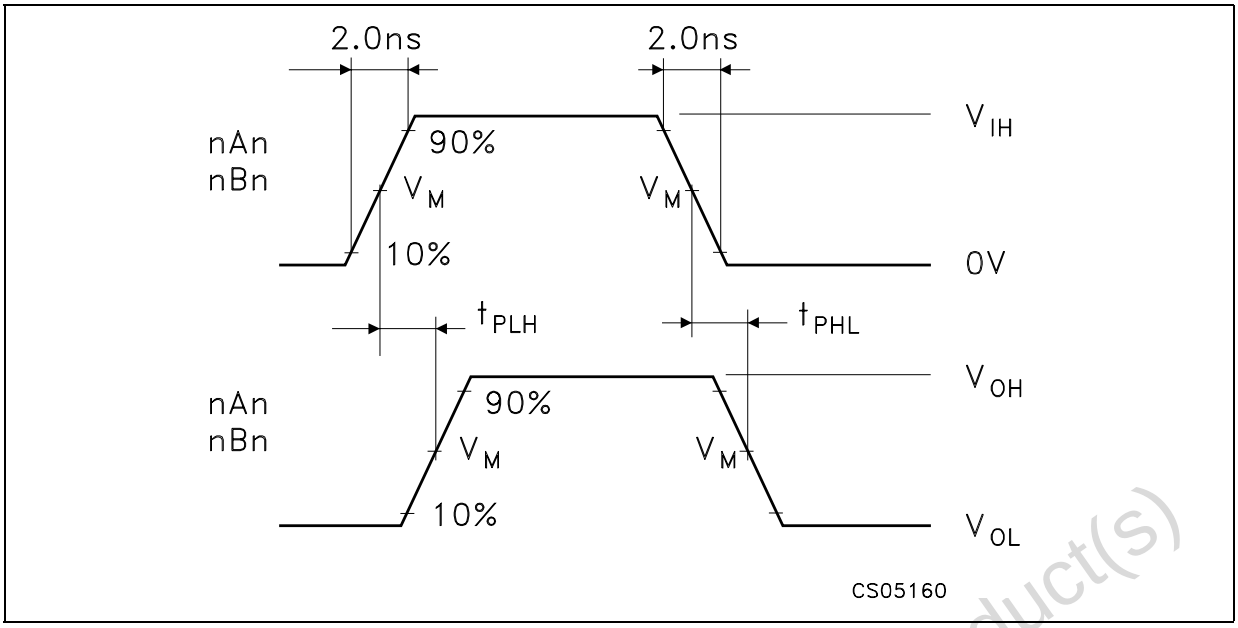

Figure 6: Waveform - Output Enable And Disable Time (f=1MHz; 50% duty cycle)

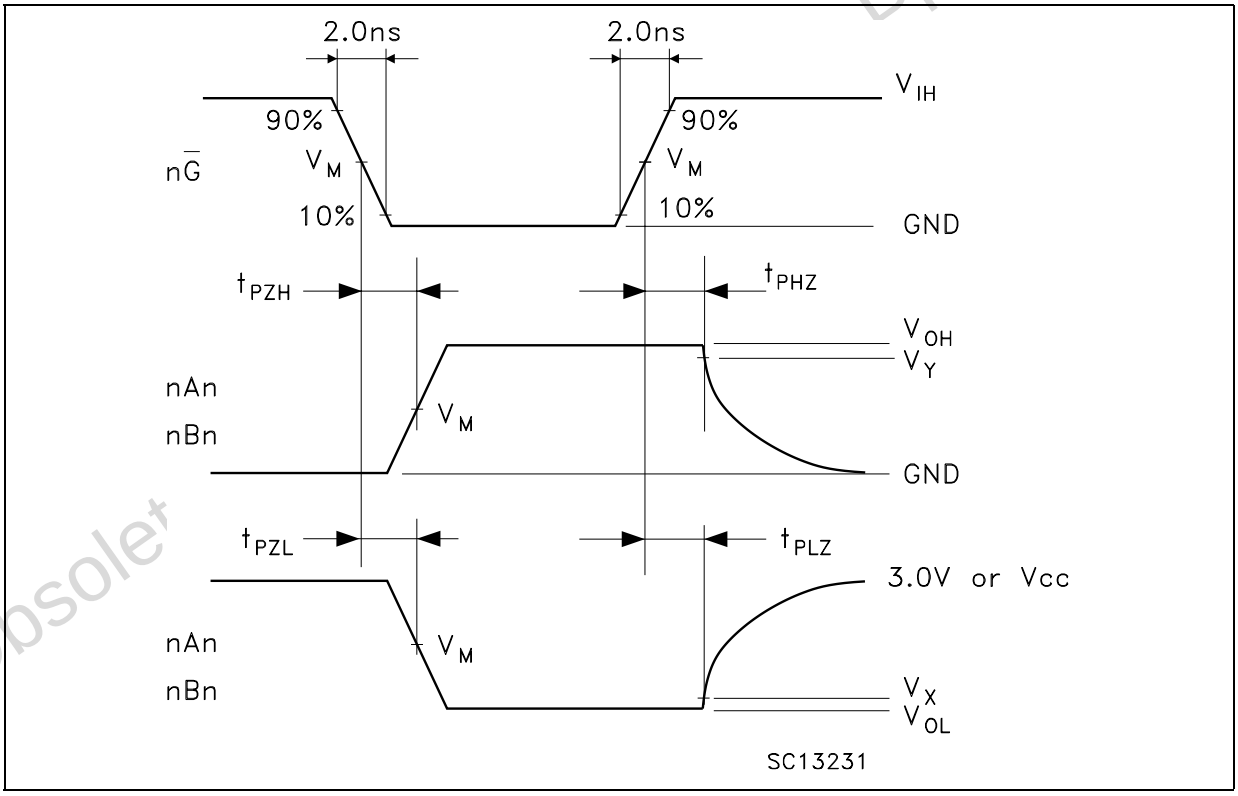

Obsolet
Product(s)

TSSOP48 MECHANICAL DATA

DIM.	mm.			inch		
	MIN.	TYP	MAX.	MIN.	TYP.	MAX.
A			1.2			0.047
A1	0.05		0.15	0.002		0.006
A2		0.9			0.035	
b	0.17		0.27	0.0067		0.011
c	0.09		0.20	0.0035		0.0079
D	12.4		12.6	0.488		0.496
E		8.1 BSC			0.318 BSC	
E1	6.0		6.2	0.236		0.244
e		0.5 BSC			0.0197 BSC	
K	0°		8°	0°		8°
L	0.45		0.75	0.018		0.030

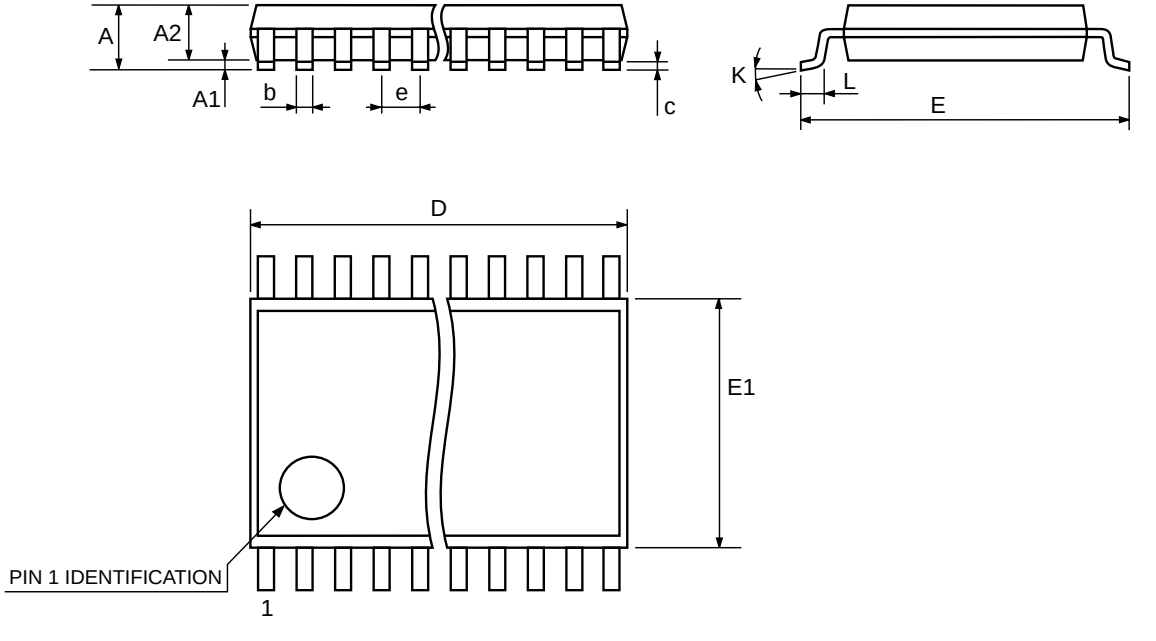

7065588D

TFBGA54 MECHANICAL DATA

DIM.	mm.			mils		
	MIN.	TYP	MAX.	MIN.	TYP.	MAX.
A			1.2			47.2
A1	0.25			9.8		
A2	0.78		0.86	30.7		33.8
B	0.35	0.4	0.45	13.7	15.7	17.7
D	7.9		8.1	311.0		318.9
D1		6.4			252.0	
E	5.4	5.5	5.6	212.6	216.5	220.5
E1		4			157.5	
e		0.8			31.5	
SE		0.4			15.7	

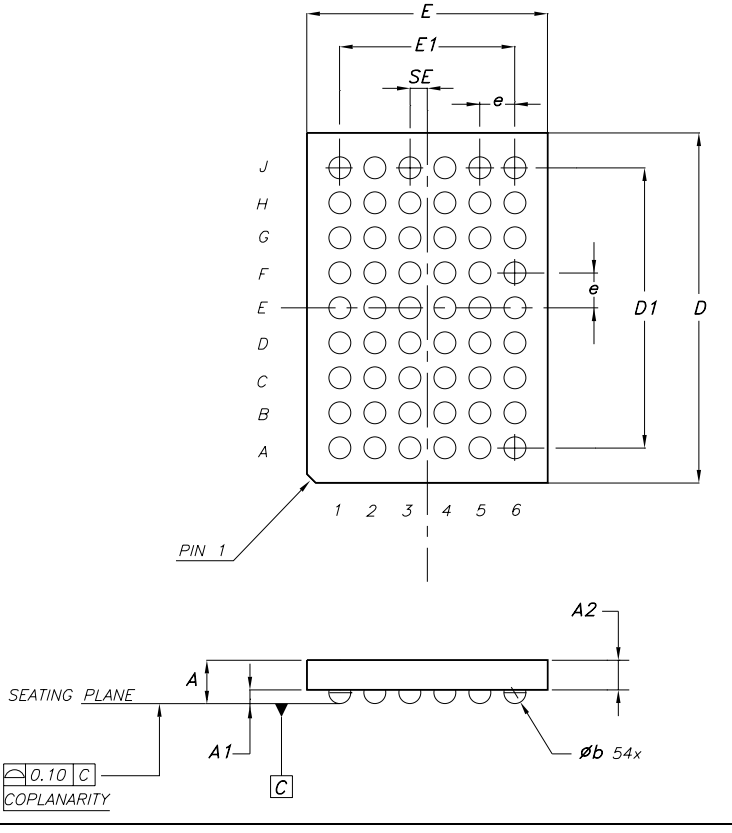

7390143/C

µTFBGA42 MECHANICAL DATA

DIM.	mm.			mils		
	MIN.	TYP	MAX.	MIN.	TYP.	MAX.
A	1.0	1.1	1.16	39.4	43.3	45.7
A1			0.25			9.8
A2	0.78		0.86	30.7		33.9
b	0.25	0.30	0.35	9.8	11.8	13.8
D	3.9	4.0	4.1	153.5	157.5	161.4
D1		3			118.1	
E	3.4	3.5	3.6	133.9	137.8	141.7
E1		2.5			98.4	
e		0.5			19.7	
SE		0.25			9.8	

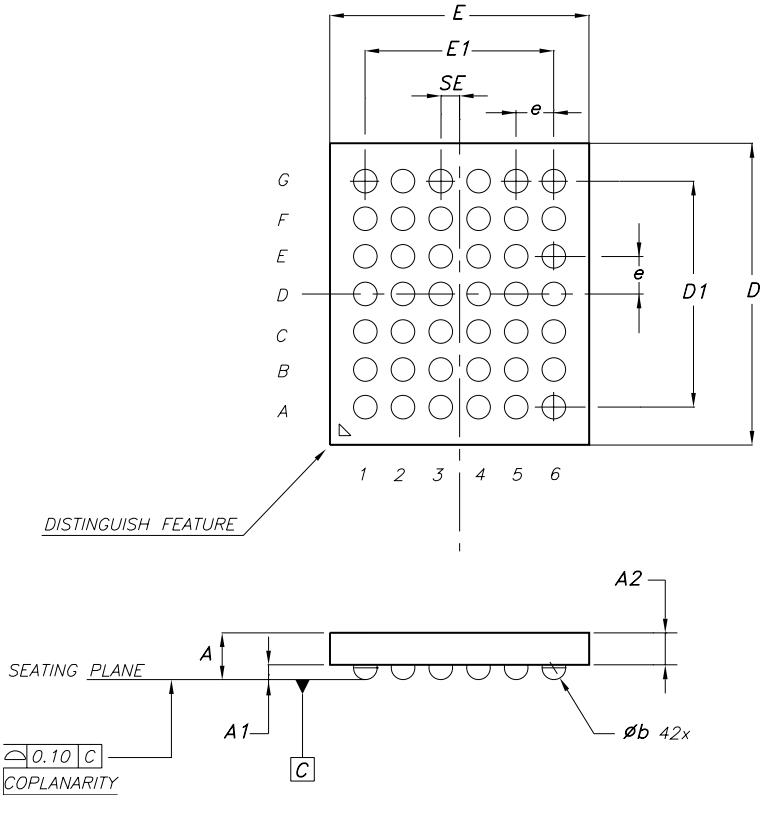

Tape & Reel TSSOP48 MECHANICAL DATA

DIM.	mm.			inch		
	MIN.	TYP	MAX.	MIN.	TYP.	MAX.
A			330			12.992
C	12.8		13.2	0.504		0.519
D	20.2			0.795		
N	60			2.362		
T			30.4			1.197
Ao	8.7		8.9	0.343		0.350
Bo	13.1		13.3	0.516		0.524
Ko	1.5		1.7	0.059		0.067
Po	3.9		4.1	0.153		0.161
P	11.9		12.1	0.468		0.476

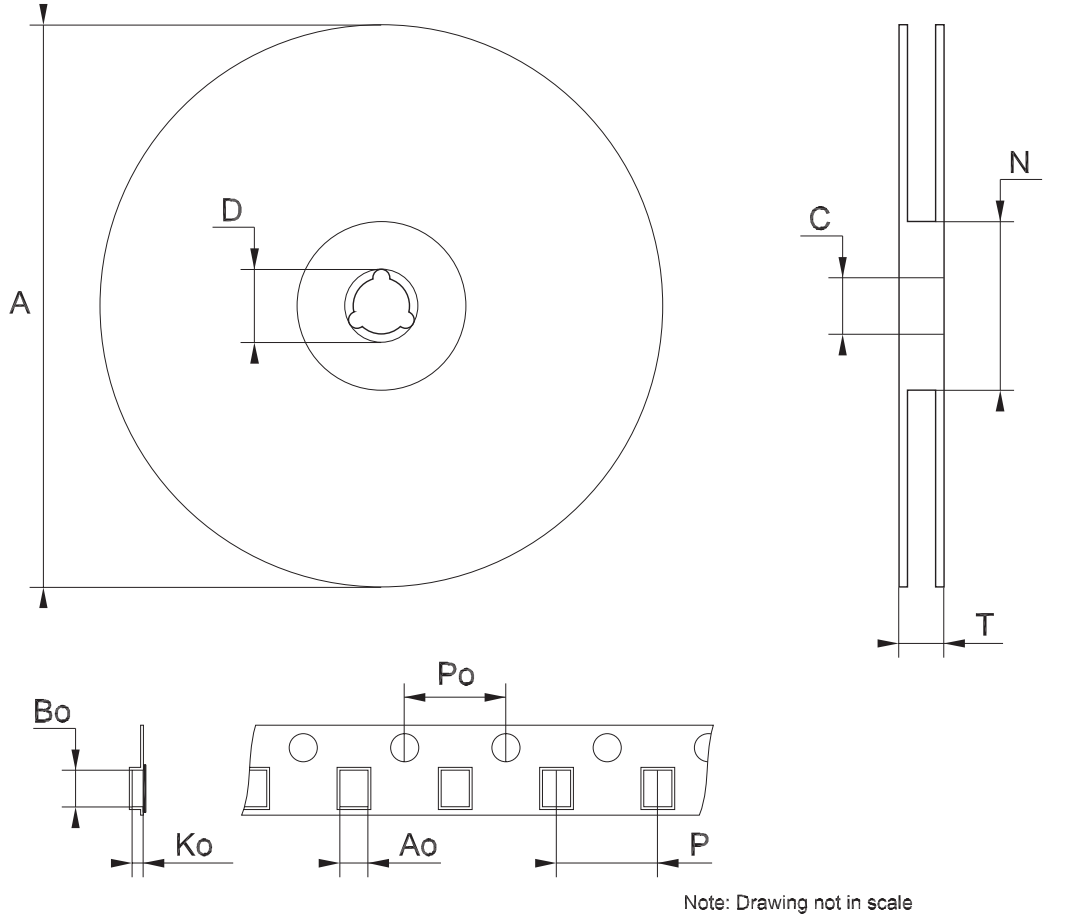

Note: Drawing not in scale

Tape & Reel TFBGA42 MECHANICAL DATA

DIM.	mm.			inch		
	MIN.	TYP	MAX.	MIN.	TYP.	MAX.
A			330			12.992
C	12.8		13.2	0.504		0.519
D	20.2			0.795		
N	60			2.362		
T			14.4			0.567
Ao		3.8			0.149	
Bo		4.3			0.169	
Ko		1.05			0.041	
Po	3.9		4.1	0.153		0.161
P	7.9		8.1	0.311		0.319

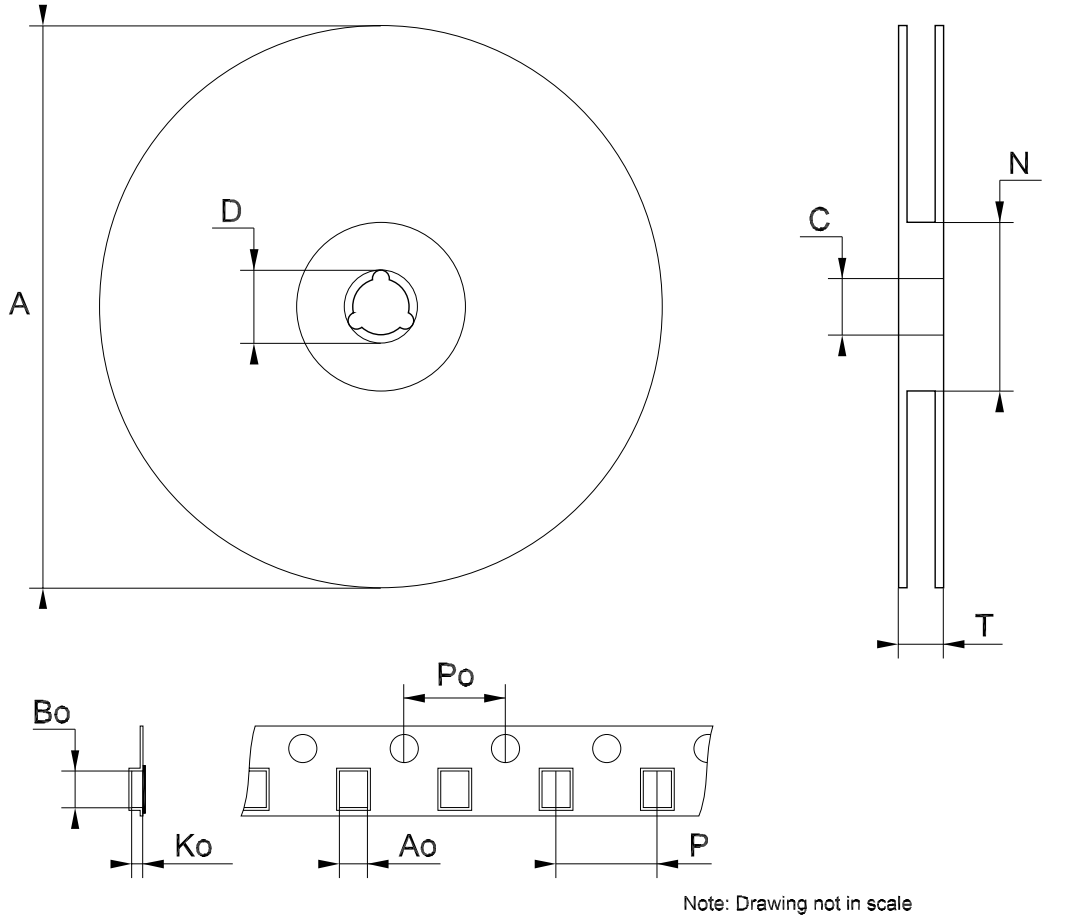

Note: Drawing not in scale

Tape & Reel TFBGA54 MECHANICAL DATA

DIM.	mm.			inch		
	MIN.	TYP	MAX.	MIN.	TYP.	MAX.
A			330			12.992
C	12.8		13.2	0.504		0.519
D	20.2			0.795		
N	60			2.362		
T			22.4			0.882
Ao		6.1			0.240	
Bo		8.6			0.339	
Ko		1.8			0.071	
Po	3.9		4.1	0.153		0.161
P	7.9		8.1	0.311		0.319

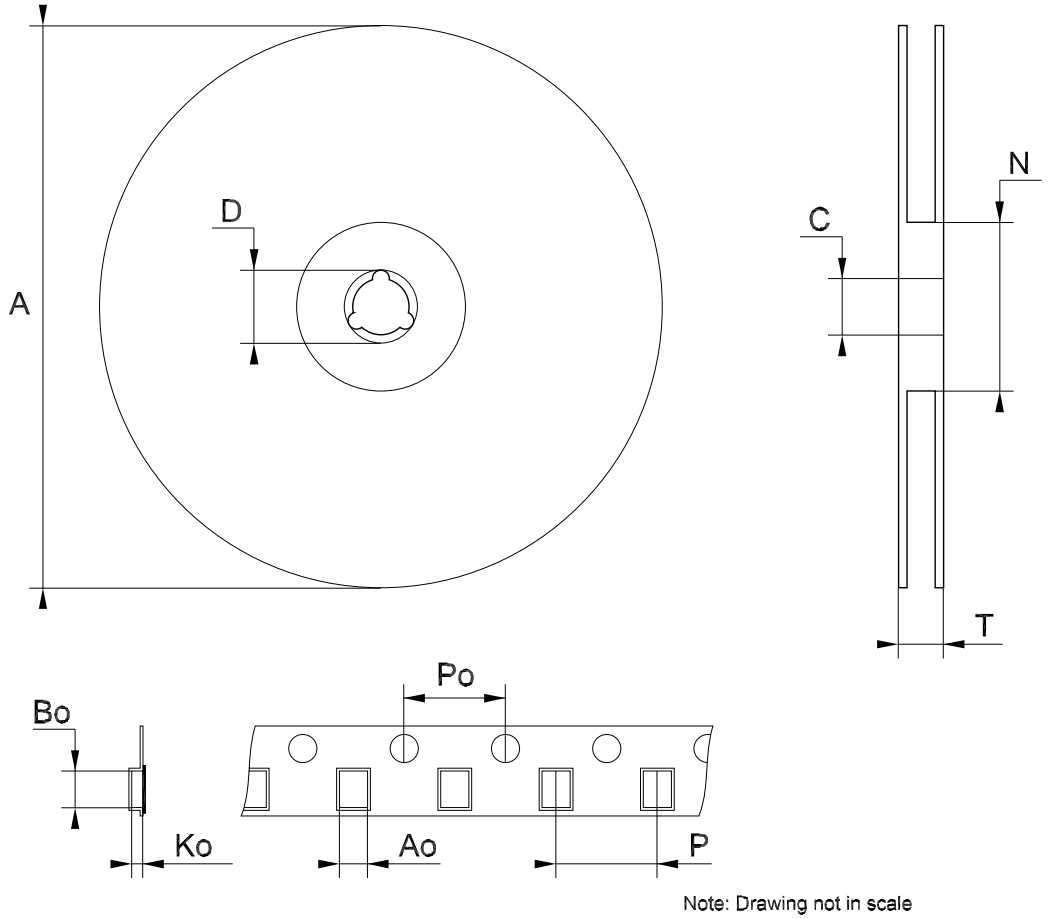

Note: Drawing not in scale

Table 12: Revision History

Date	Revision	Description of Changes
01-Sep-2004	1	First Release.
21-Dec-2004	2	Add New Part Number.
24-Jan-2005	3	Add Note on Table 1.

Obsolete Product(s) - Obsolete Product(s)

Information furnished is believed to be accurate and reliable. However, STMicroelectronics assumes no responsibility for the consequences of use of such information nor for any infringement of patents or other rights of third parties which may result from its use. No license is granted by implication or otherwise under any patent or patent rights of STMicroelectronics. Specifications mentioned in this publication are subject to change without notice. This publication supersedes and replaces all information previously supplied. STMicroelectronics products are not authorized for use as critical components in life support devices or systems without express written approval of STMicroelectronics.

The ST logo is a registered trademark of STMicroelectronics

All other names are the property of their respective owners

© 2005 STMicroelectronics - All Rights Reserved

STMicroelectronics group of companies

Australia - Belgium - Brazil - Canada - China - Czech Republic - Finland - France - Germany - Hong Kong - India - Israel - Italy - Japan - Malaysia - Malta - Morocco - Singapore - Spain - Sweden - Switzerland - United Kingdom - United States of America

www.st.com